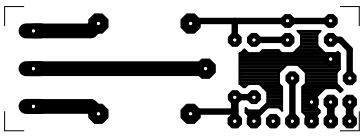

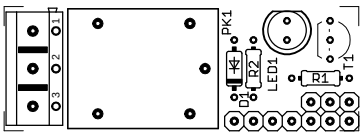
PK1
D1
R2
LED1
R1
T1

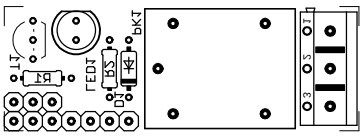
LED1
R1
D1
R2
PK1

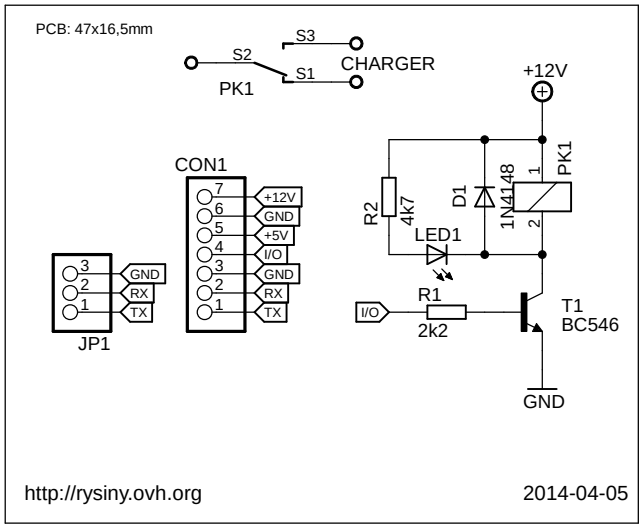
PCB: 47x16,5mm
S3
S2
S1
CHARGER
PK1
+12V
CON1
7
6
5
4
3
2
1
+12V
GND
+5V
I/O
GND
RX
TX
R2
4k7
D1
1N4148
PK1
LED1
R1
2k2
I/O
T1
BC546
GND
3
2
1
GND
RX
TX
JP1
http://rysiny.ovh.org
2014-04-05